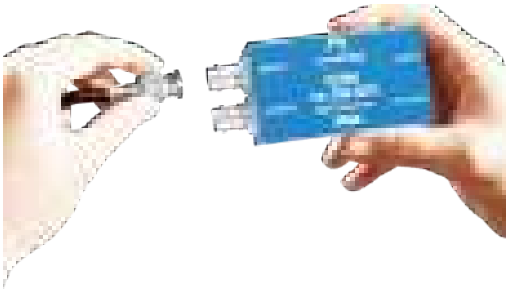

About CanaBridge

The professionals' choice

A sub brand "CanaBridge" is established by Canare. Providing simple and affordable solutions of video signals, bridging long lasting Canare users between new generation of SNS video creators.

CanaBridge video converters will give you smart move on HDMI, 3G-SDI, and 12G-SDI interconnects. Canare engineers its development and quality verification. All CanaBridge products are equipped with light weight and sleek aluminum chassis.

CanaBridge 5 Identities

01 Superb Combination

We raised the bar on mini converters solutions. CanaBridge converters connected with Canare products are superb combination.

02 Professional Support

Canare is here to assist you all the time. All CanaBridge products include one-year hassle free exchange program. In addition, We will provide the best sales support as well as after sale service.

03 Stable Performance

CanaBridge converters will deliver stable performance even under demanding environments. It meets your expectation without any surprises.

04 Fully Engineered

Canare engineers invest engineering effort and whole enthusiasm into CanaBridge products. Verified technical accuracies and put it into original aluminum case.

05 Solid

CanaBridge has been looking at cutting-edge technologies, appropriate materials, and standardized processes.

CanaBridge

Website

Lifetime Support
CanaBridge 5 Identities Guarantees

5 CanaBridge Identities Guarantees

12G-SDI Solutions

CB-1120 (TX and RX) New

12G-SDI Fiber Optic Extender

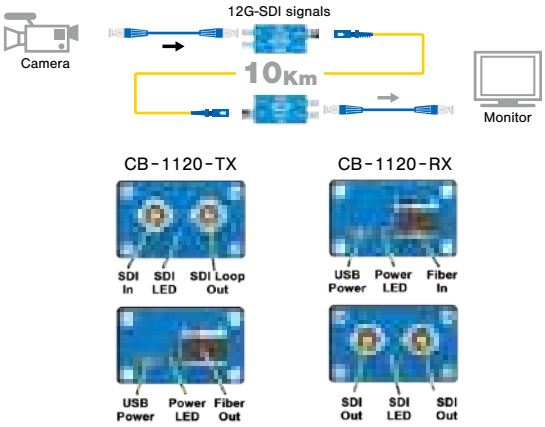

Key Features and Benefits

- 12G/6G/3G-SDI input & loopout on transmitter
- Dual 12G-SDI outputs on receiver
- Supports up to 12G bandwidth
- SDI input automatic switching SD, HD, 3G, 6G, 12G-SDI
- 10km transmission distance

12G-SDI

■ Specifications

Model	CB-1120 (TX and RX)
Power	Micro USB
Power Consumption	2.0W (Max)
Voltage Range	USB 3.3-5.5 V
Dimension	72.4 × 41 × 24.6 mm
Net Weight	Transmitter: 115 g, Receiver: 115 g
Gross Weight	960g

CB-8120 New

12G-SDI 1 × 2 Signal Repeater

12G-SDI

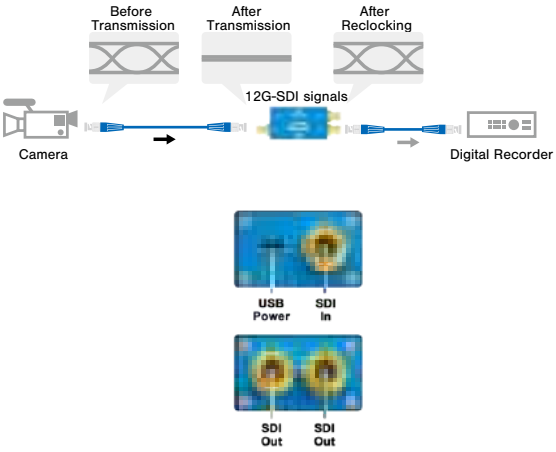

Key Features and Benefits

- Input: 1 × 12G-SDI, Output: 2 × 12G-SDI
- Support DVB-ASI signal
- Automatically detects SD, HD, 3G, 6G, 12G-SDI
- Automatic cable equalization and signal retiming
- Detachable bracket design for wall mounting

■ Specifications

Model	CB-8120
Power	Micro USB
Power Consumption	1.0W (Max)
Voltage Range	USB 3.3-5.5 V
Dimension	72.4 × 41 × 24.6 mm
Net Weight	110 g
Gross Weight	470g

CB-8130 New

12G-SDI 1 × 5 Reclocking Distribution Amplifier

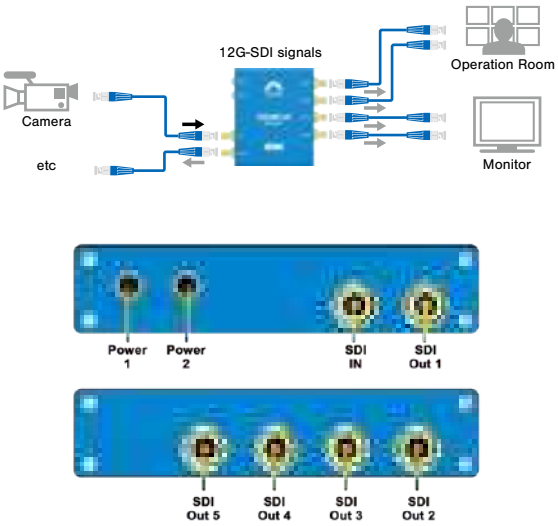

Key Features and Benefits

- 12G/6G/3G/HD/SD-SDI multi-rate signal processing
- 5 buffered and re-clocked outputs
- Support DVB-ASI signal (OUT1, 4, 5)
- Automatic cable equalization and signal retiming
- All ancillary data is passed to the outputs

12G-SDI

■ Specifications

Model	CB-8130
Power Supply	Threaded locking DC connector
Voltage Range	DC 6-23 V
Power Consumption	3W (Max)
Dimension	125.5 × 102 × 27.5 mm
Net Weight	310 g
Gross Weight	950 g

3G-SDI Solutions

CB-2011
3G-SDI to HDMI mini Converter

CB-2012
HDMI to 3G-SDI mini Converter

Key Features and Benefits

- Being made for Broadcast equipment
- Powered Anywhere
- Pocket Size and Easy to Mount

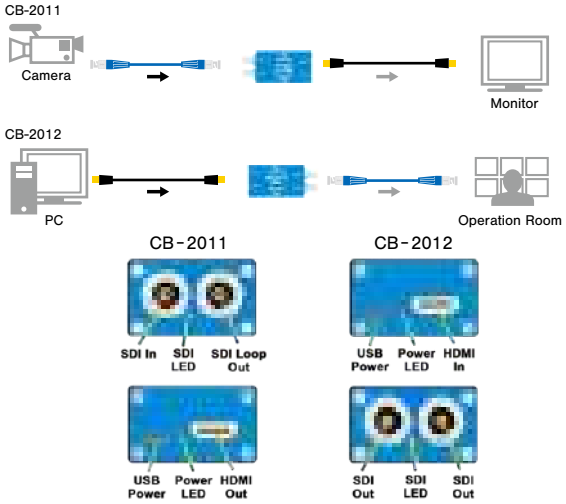

■ Specifications

Model	CB-2011	CB-2012
Power	Micro USB	
Power Consumption	2.5W (Max)	2W (Max)
Voltage Range	USB 3.3-5.5 V	
Dimension	72.4 × 41 × 24.6 mm	
Net Weight	110 g	
Gross Weight	470 g	

CB-2021
3G-SDI to HDMI & AV Scaling Converter

Key Features and Benefits

- Up/down scaling and frame rate conversion
- AES/EBU or Analog Audio Embedding & De-embedding
- Input signal automatic detection and configuration
- LED indicators for power and signal lock

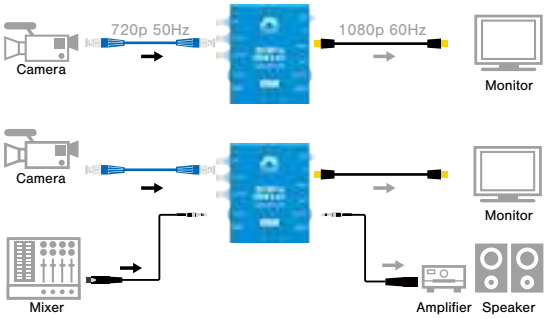

■ Specifications

Model	CB-2021
Power	Threaded locking connector
Power Consumption	6W (Max)
Voltage Range	DC 6-24 V
Dimension	125.5 × 101.4 × 27.5 mm
Net Weight	310 g
Gross Weight	995 g

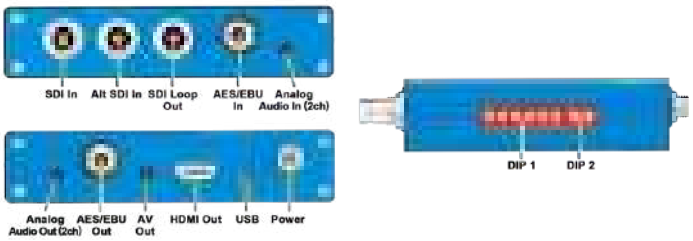

CB-2022
HDMI & AV to 3G-SDI Scaling Converter

Key Features and Benefits

- Up/down scaling and frame rate conversion
- AES/EBU or Analog Audio Embedding & De-embedding
- Input signal automatic detection and configuration
- LED indicators for power and signal lock

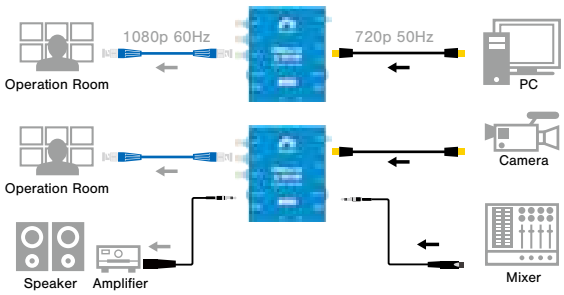

■ Specifications

Model	CB-2022
Power	Threaded locking connector
Power Consumption	6W (Max)
Voltage Range	DC 6-15 V
Dimension	125.5 × 101.4 × 27.5 mm
Net Weight	310 g
Gross Weight	995 g

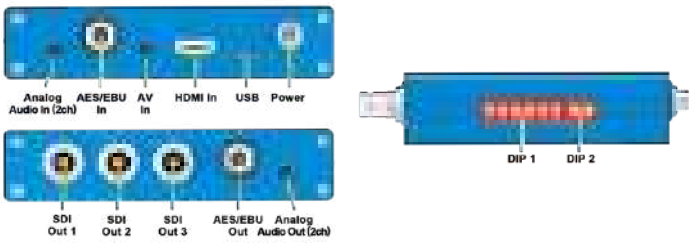

3G-SDI Solutions

CB-8010

3G-SDI 1 × 4 Distribution Amplifier

Key Features and Benefits

- Automatically detects SD, HD and 3G-SDI
- 4 buffered and re-clocked outputs
- 3G/HD/SD-SDI multi-rate signal processing
- Output 2 & 4 support DVB-ASI signal
- Automatic cable equalization and signal retiming

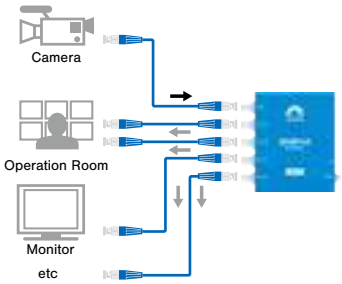

■ Specifications

Model	CB-8010
Power	Micro USB or Threaded locking DC connector
Power Consumption	1.5W (Max)
Voltage Range	USB 5V, DC 5-17 V
Dimension	125.5 × 101.4 × 27.5 mm
Net Weight	310 g
Gross Weight	920 g

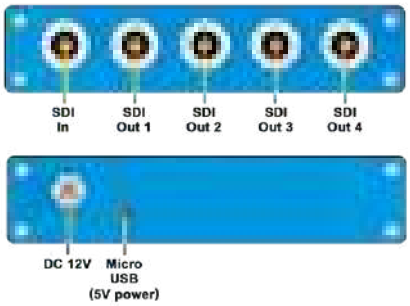

CB-1010 (TX and RX)

3G-SDI Fiber Optic Extender

Key Features and Benefits

- 20km transmission distance
- Support 3Gbit Level A and Level B (all formats)
- SFP/LC Fiber transmitter & receiver
- SDI equalization and re-clocking
- 3G-SDI input & loopout on transmitter

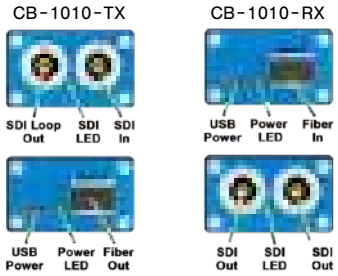

■ Specifications

Model	CB-1010 (TX and RX)
Power	Micro USB
Power Consumption	1.5W (Max)
Voltage Range	USB 3.3-5.5 V
Dimension	72.4 × 41 × 24.6 mm
Net Weight	Transmitter: 115 g, Receiver: 115 g
Gross Weight	750 g

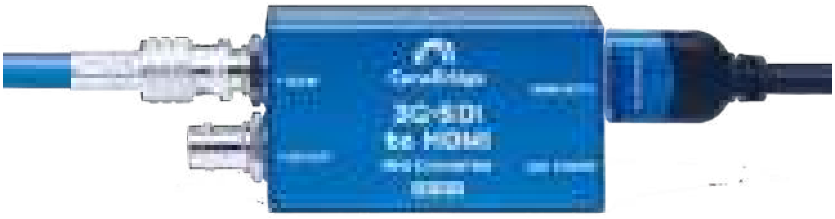

Canare Europe GmbH is expanding its cabling product portfolio to meet European construction requirements. In Canare quality/performance, we made installation cables with appropriate FRNC and LSZH materials for broadcast infrastructures and ProAV installations.

Hybrid Fiber-optic Camera Cables (SMPTE ST311)

: Bestselling products

Type	Model	Sales Units (m)	Nom. O.D. (mm)	Weight kg/100m	Outer Jacket	Overall Shield	Tension Tolerance (N)	Strength Member O.D. (mm)	Min. Bend Radius	Temp. Range (deg C)	Channel Unit		
											Fiber	Aux. (Power)	Signal (Control)
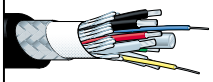 Jacket color: BLK	LF-2SM9N-PUR	Call	9.2	12.0	PUR	9/24/ 0.10TA 91%	700	2.6	6 × Nom. O.D.	-40 to +75	2 × SM 9/125 (low-water-peak) Unit O.D. 0.9 mm	4 × 20 AWG 21/0.18TA Unit O.D. 1.7 mm	2 × 25 AWG 7/0.18TA Unit O.D. 1.2mm
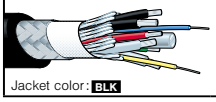 Jacket color: BLK	LF-2SM9-FRNC CPR Eca	Call	9.2	12.0	FRNC	9/24/ 0.10TA 91%	700	2.6	6 × Nom. O.D.	-40 to +75	2 × SM 9/125 (low-water-peak) Unit O.D. 0.9 mm	4 × 20 AWG 21/0.18TA Unit O.D. 1.7 mm	2 × 25 AWG 7/0.18TA Unit O.D. 1.2mm

LF-2SM9N-PUR

- PUR: Polyurethane jacketed durable SMPTE cable
- Bend-resistant in extremely low temperatures

LF-2SM9-FRNC

- Fire Rated: IEC 60332-1, IEC 60754-2, and IEC 61034
- FRNC jacketed installation cable

■ Camera to CCU

Type	Model	Length (m)
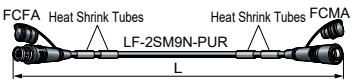 Jacket color: BLK	FCC10N-PUR	10
	FCC50N-PUR	50
	FCC100N-PUR	100
	FCC200N-PUR	200

FCFA

FCMA

FCCN-PUR**

- Heavy duty SMPTE camera cable
- For all studio and outside broadcast applications
- Assembled in Europe
- Professional service points in EU for quick support

HFO Protective Covers

Any-time-fit-on protector for SMPTE connector-the new traditional

Model	Shape	Component	Color
FC-CV-F-SET-**	Female	1 × Boot 1 × Holder	RD: Red GR: Green YL: Yellow BK: Black
FC-CV-M-SET-**	Male		

Please specify the color such as FC-CV-F-SET-RD

Cover: PVC, Holder: PE

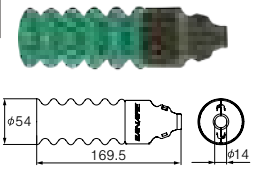

FC-CV-F-SET-GR

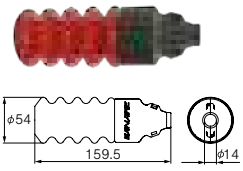

FC-CV-M-SET-RD

Lightweight Cable Reels

Lightweight plastic cable reels made by Schill™

Model	Flange Dim.	Description	Weight
RGT310.RM	310 mm	with auxiliary reel	1.8 kg
RGT380.RM	380 mm		4.8 kg
RGT310.MFK	310 mm	with latching door	1.4 kg
RGT380.MFK	380 mm		4.3 kg

Color: dark blue

- Canare and Schill™ collaboration
  *Schill™ is a trademark of Schill GmbH & Co. KG
- Easy to carry around
- High quality resin: durable, weatherproof and lightweight.
- Locking brake
- Latchig door type (MFK) allows you to store cable connector inside reel.
- Canare special colored flange
- Rough estimate of maximum cable lengths (cable O.D.)
  RGT310: L-4E6S 120 m (6 mm)
  RGT380: L-5CFW 130 m (7.7 mm)
  RJC6A-4P-SFM 110m (8.6 mm)
  LF-2SM9N 100m (9.2 mm)

RGT310.RM

RGT380.MFK

Website

RGT380.MFK
door open

CPR Rated 75Ω Coaxial Cables

Type	Model	Sales units	Nom. O.D.	Weight	Inner cond. Comp.	Inner cond. O.D.	Insulation O.D.	Outer conductors Foil	Outer conductors Braid comp. (coverage)	Inner cond. resist.	Outer cond. resist.	Static capacity	Characteristic impedance	Attenuation	NVP
		m	mm	kg/100m	(AWG) Q'ty/mm	mm	mm		mm/ends/carriers	Ω/km	Ω/km	pF/m	Ω	dB/100m (6 GHz)	%
Ultra Coax 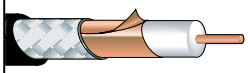 Jacket colors for L-3.3CUHD-FRNC: BLK BRN GRN PPL L-5.5CUHD-FRNC: BLK BRN GRN PPL	12G-SDI **L-3.3CUHD-FRNC** CPR B2	100 200	5.5	4.1	(21) 1/0.75A	0.75	3.3	Cu	0.12TA/8/16 (92%)	41.4	14.9	55	75	68.5	82
	12G-SDI **L-5.5CUHD-FRNC** CPR B2	100 200 500 1000	7.7	7.1	(16) 1/1.35A	1.35	5.55	Cu	0.12TA/8/24 (91%)	12.8	10.3	52	75	39.1	86
Super Coax 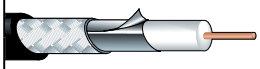 Jacket colors: BLK and others	**L-2.5CHD-FRNC** CPR B2	100 200	4.2	2.6	(23) 1/0.59A	0.59	2.59	AL	0.12TA/7/16 (95%)	66.9	16.9	53	75	43.1	82
	L-4.5CHD-FRNC CPR Cca		7.0	6.2	(18) 1/1.02A	1.02	4.57	AL	0.14TA/6/24 (91%)	23.3	9.9	53	75	25.1	81

Jacket: FRNC Dielectric strength: 1000V AC/min.

L-CUHD-FRNC Series

- FRNC jacketed ultra coax
- CPR Euro Class B2ca
- Specially designed for 12G-SDI
- The max. transmission distance of 4K UHD over L-5.5CUHD single link able to reach 100 m or longer*.
  * Depending on receiving equipment.
- As handy as conventional coaxial cables.
- Copper foil and high-density tinned copper braided shielding.
- Highly-foamed multi-layer PE insulation

L-CUHD-FRNC Series

- FRNC jacketed super coax
- CPR Euro Class B2ca or Cca
- Best suited to 3G-SDI/HD-SDI transmission
- Highly-foamed PE insulation allows further improvement in the attenuation characteristics.
- Multi-layer insulation in which to each layer is given a different foaming ratio is used to increase strength.
- High-density tinned copper braided shield with aluminum foil brings excellent shielding.

Note 1: Designed for fixed installation, please avoid repeated bending or external pressure.
Note 2: Cable strippers (TS100 series) cannot be used for L-5.5CUHD-FRNC.

Converters

Regionally Exclusive Sales

12G-SDI EO/OE Converters 12G-SDI — 1 slot

12G | 6G | 3G | HD | SD | DVB-ASI

Electric to Optic Converter (TX)

1310 nm | 1 × LC | 1 × 75Ω BNC
1 EO12G-100B

1271-1451nm for CWDM | 1 × LC | 1 × 75Ω BNC
3 EO12G-100A-**

Optic to Electric Converter (RX)

1260-1650nm | 1 × LC | 1 × 75Ω BNC
2 OE12G-101B

- Capable of Pathological Test Pattern transmission
- 12G-SDI Optical transmission: 12km (typ.)

12G-SDI Repeater 12G-SDI — 1 slot

12G | 6G | 3G | HD | SD | DVB-ASI

4 EE12G-100 | 2 × 75Ω BNC

- 12G -SDI Cable Reach : 100 m over L-5.5CUHD (Typ.)
- Capable of Pathological Test Pattern transmission

3G-SDI EO/OE Converters

3G | HD | SD | DVB-ASI

Electric to Optic Converter (TX)

1310 nm | 1 × LC | 1 × 75Ω BNC
5 EO3G-100 | 1 slot

1310 nm | 1 × LC | 2 × 75Ω BNC
7 EO3G-200 | 2 slots

1271-1611nm for CWDM | 1 × LC | 2 × 75Ω BNC
9 EO3G-100A-** | 1 slot

Optic to Electric Converter (RX)

1200-1620nm | 1 × LC | 1 × 75Ω BNC
6 OE3G-101 | 1 slot

1200-1620nm | 1 × LC | 2 × 75Ω BNC
8 OE3G-201 | 2 slots

- Capable of Pathological Test Pattern transmission
(SMPTE RP-178, 198 Check Field Test Pattern)

Analog Audio Optical Converters — 5 slots

Analog Audio

1310 nm | 1 × SC | 1 × D sub 25 pin(F)
10 TRM-540

1550 nm | 1 × SC | 1 × D sub 25 pin(F)
TRM-541

1471-1611 nm for CWDM | 2 × LC | 1 × D sub 25 pin(F)
11 TRM-540A-**

- Enables line level audio signals to transmit long distance over a fiber-optic cable.

1000BASE-T Optical Converters — 2 slots

1000BASE-T

1310 nm | 1 × SC | 1 × RJ45
12 TRM-300-G31

1550 nm | 1 × SC | 1 × RJ45
TRM-300-G55

1471-1611 nm for CWDM | 2 × LC | 1 × RJ45
13 TRM-300A-G**

- Media converters for Gigabit Ethernet 1000BASE-T

100BASE-TX Optical Converters — 2 slots

100BASE-TX

1310 nm | 1 × SC | 1 × RJ45
14 TRM-210

1550 nm | 1 × SC | 1 × RJ45
TRM-211

1471-1611 nm for CWDM | 2 × LC | 1 × RJ45
15 TRM-210A-**

- Media converters for Fast Ethernet 100BASE-TX

HFO Transmission Devices

26 FCBK4-12G 12G-SDI

12G | 6G | 3G | HD | SD | DVB-ASI

FCFRA (Female) | 4 × OE12G-101B
FCBK4-FF5W1-12G

FCFRA (Female) | 4 × OE12G-101 | IDX V-plate
FCBK4-FF5W1-12G-PV

FCMRA (Male) | 4 × EO12G-100A
FCBK4-FM5W2-12G

FCMRA (Male) | 4 × EO12G-100A | IDX V-plate
FCBK4-FM5W2-12G-PV

27 FCBA4-3G

3G | HD | SD | DVB-ASI

FCFRA (Female) | 4 × OE3G-101
FCBA4-FF5W1

FCFRA (Female) | 4 × OE3G-101 | IDX V-plate
FCBA4-FF5W1-PV

FCMRA (Male) | 4 × EO3G-100A
FCBA4-FM5W2

FCMRA (Male) | 4 × EO3G-100A | IDX V-plate
FCBA4-FM5W2-PV

28 FCBK-12G 12G-SDI

12G | 6G | 3G | HD | SD | DVB-ASI

FCFRA (Female) | EO/OE 12G
FCBK-FF3W1-12G

FCFRA (Female) | EO/OE 12G | IDX V-plate
FCBK-FF3W1-12G-PV

FCMRA (Male) | OE/EO 12G
FCBK-FM3W2-12G

FCMRA (Male) | OE/EO 12G | IDX V-plate
FCBK-FM3W2-12G-PV

29 FCBA-3G

3G | HD | SD | DVB-ASI

FCFRA (Female) | EO/OE 3G
FCBA-FF3W1-3G

FCFRA (Female) | EO/OE 3G | IDX V-plate
FCBA-FF3W1-3G-PV

FCMRA (Male) | OE/EO 3G
FCBA-FM3W2-3G

FCMRA (Male) | OE/EO 3G | IDX V-plate
FCBA-FM3W2-3G-PV

Active Devices for Broadcasting, Live Production, and ProAV

Converters, Platforms, Stand Alone Kit, CWDM Mux/Demux, Optical Splitter

Please note that certain products on these pages may not be eligible for sale due to non-compliance with local regulations, including but not limited to UL, CE, KC certifications, and voltage specifications. Contact us for further information.

Website

RS-422/RS-232 Optical Converters — 3 slots

RS-422 | RS-232

1310 nm 1 × SC 1 × Dsub 9 pin(F)
16 TRM-220

1550 nm 1 × SC 1 × Dsub 9 pin(F)
TRM-221

1471-1611 nm for CWDM 2 × LC 1 × Dsub 9 pin(F)
17 TRM-220A-**

- TIA-422, SMPTE ST 207, RS-232

18 HD-SDI/RS-485 Optical Converters — 3 slots

HD-SDI + RS-485 | SD-SDI + RS-485

TRM-100 1 × LC 1 × Dsub 9 pin(F)
TRM-101 1 × LC 1 × Dsub 9 pin(F)

19 NTSC/Audio/Data Optical Converters — 3 slots

NTSC + Audio + RS-422 + Relay

TRM-400 1 × SC 1 × BNC 2 × Terminal Block
TRM-401 1 × SC 1 × BNC 2 × Terminal Block

20 7ch Relay signal/RS-232/422 Optical Converters — 3 slots

7ch Relay + RS-232/422

TRM-230 1 × SC 1 × Circular Connector 2 × Terminal Block
TRM-231 1 × SC 1 × Circular Connector 2 × Terminal Block

Platforms

1RU rack mount type — 16 Number of Slots

Power Supply Unit

21 161UPS-LC
- One power supply module installed as standard equipment

WEPZ0340
- Optional redundant power supply module
- AC 100-240V to DC 5V adapter, AC Inlet Type C14, AC Cable not included

Portable type — 6 Number of Slots

Power Supply Unit

22 6PSC-**
- Hot swappable

Palm size — 2 Number of Slots

Power Supply Unit

23 2PSC
- Hot swappable

Stand Alone Kit

24 WMM0190
- a clamping bracket (one side)

25 WEPZ0258
- AC 100-240V to DC 5V adapter, Plug Type A No CE marking

CWDM Mux/Demux

Slot-in Module Types — 8 slots

8 ch
30 FCWDM-8B 1471-1611 nm
FCWDM-8B-13 1271-1451 nm

1RU Rack Mount Types

8 ch
31 FCWDM8/1A 1471-1611 nm
FCWDM8/1A-13 1271-1451 nm

2 each of 8 ch
32 FCWDM8/2A 2 each of 1471-1611 nm
FCWDM8/2A-13 2 each of 1271-1451 nm

16 ch
33 FCWDM16A 1271-1611 nm

Optical Splitter

1 × 2 Splitter for Single Mode Fiber
34 FDM-2

1 × 4 Splitter for Single Mode Fiber
35 FDM-4

- Divides single optical input into multiple optical output.
- Passive and stand-alone products.
- Can be loaded into platform for Canare plug-in unit.
- Easy to use-Just plug in SC-type connectors.
- Low insertion loss.

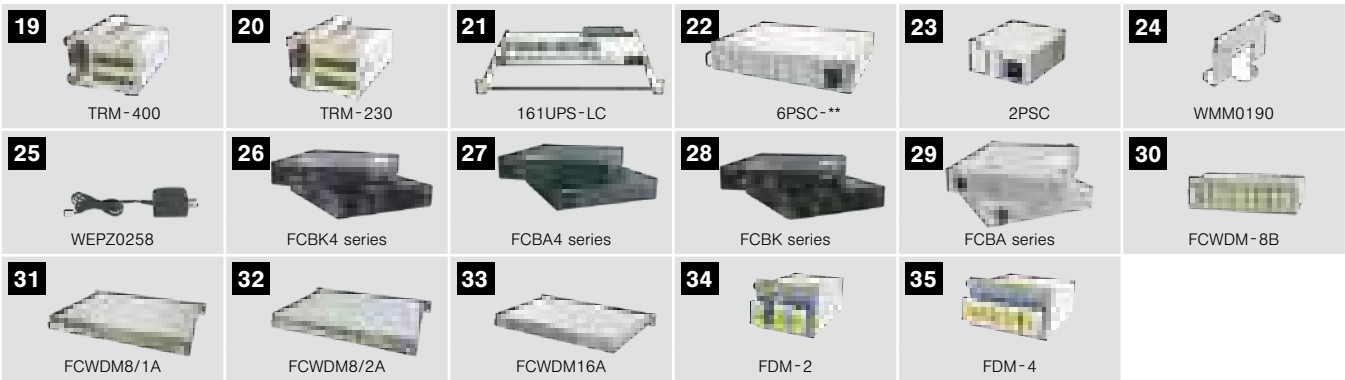

CoaXPress

CoaXPress (CXP) is a standard for imaging technology for industrial machineries. Japan Industrial Imaging Association (JIIA) released CXP in December 2010. The standard specifies an interface that enables high-speed connection between cameras and frame grabbers over 75Ω coaxial cables. It achieves data transfer of up to 12.5 Gbps from the camera to the frame grabber, control signals such as trigger signals from the frame grabber to the camera of up to 41.7 Mbps, and a power supply of 13W (Power-over-Coax). For higher data transfer speed, link aggregation allows data to be distributed and transferred over multiple cables. Version 2.0 adds 10 and 12.5 Gbps and enhances the protocol.

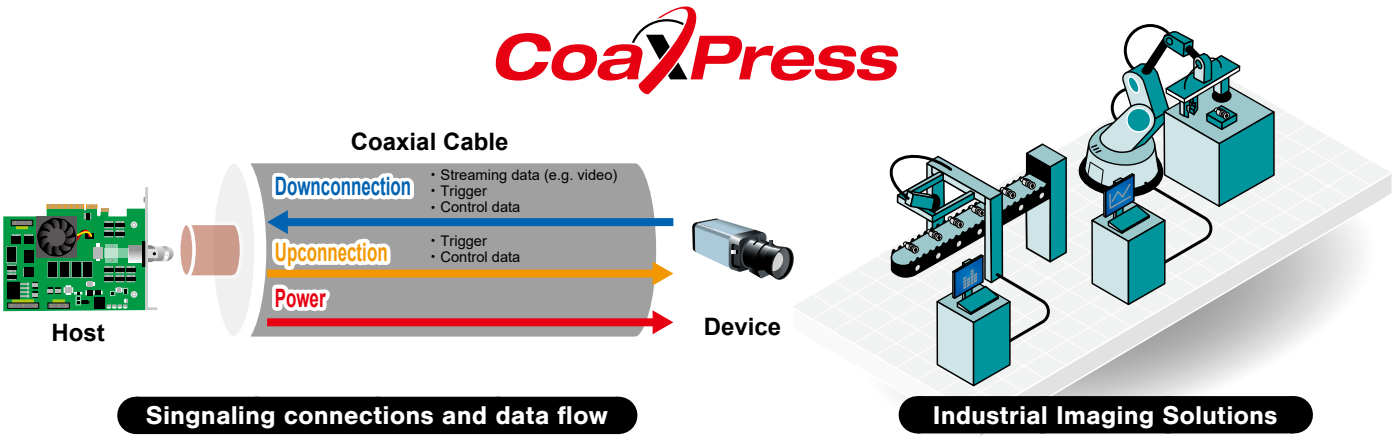

Cables and Connectors

CoaXPress specifies applicable cables shall be 75Ω coaxial type and shall be selected depending on data rate of applications. The connectors shall be 75Ω BNC and MicroBNC connectors for up to 12.5 Gbps data transfer, and DIN 1.0/2.3 connectors up to 6.25 Gbps. DIN connectors can be used for multiple data link as well. CoaXPress verifies cable and connectors upon manufacturer's request. The certified cable and connectors can be found on their website at [http://jiia.org/en/cxp/].

■ Specifications 1: CXP Coax Cables

Type	Impe-dance	Bit Rate (Gbps)	Max. Attn. (dB)	@ Freq. (GHz)	Low Speed Attn. (dB)	DC Resistance (Round Trip)	Suggested Distance with Approx. 15% Margin				
							L-2.5CHD	L-3.3CUHD	L-4.5CHD	L-5.5CUHD	L-8CUHD
CXP-1	75Ω (±4Ω)	1.25	21.2	0.625	≦4.74 @30MHz	<4.98Ω	56m	81m	99m	144m	208m
CXP-2		2.5	26.0	1.25			52m	70m	89m	123m	176m
CXP-3		3.125	26.8	1.5625			48m	64m	81m	112m	160m
CXP-5		5.0	20.9	2.5			29m	39m	49m	68m	96m
CXP-6		6.25	15.8	3.125			20m	27m	34m	47m	60m
CXP-10		10.0	20.8	5.0	≦2.5 @60MHz		21m	27m	34m	47m	65m
CXP-12		12.5	17.9	6.25			16m	19m	26m	35m	50m

Note: Cable distances for CXP-6 and CXP-12 are based on JIIA ECT (Electric Compliance Test) program.

■ Specifications 2: CXP Connectors

Type	Normative Reference	Impedance	Contact Material	Return Loss	CXP Speed	Canare
BNC	IEC 61169-8	75Ω (±4Ω)	Center: Gold plated Outer : Nickel or white bronze plated	0-500MHz : 20dB 500MHz-6.25GHz: 15dB	Up to CXP-12	BCP-D BCP-B
MicroBNC	N/A					HBCP-D
DIN 1.0/2.3	IEC 61169-29		Center: Gold plated Outer : Gold plated		Up to CXP-6	DCP-C

Why Canare?

Canare has industry-leading expertise and a proven track record in SDI transmission within the broadcasting industry. The transmission requirements for 12G-SDI and CXP-12 are very similar, allowing us to widely leverage the coaxial cable transmission technology we have developed over the years.

■ Comparison: 12G-SDI and CXP-12

Format	12G-SDI	CXP-12
Bit Rate	11.88Gbps	12.50Gbps
Impedance	75Ω	75±4Ω (TDR)
Cable Loss	40dB @5.94GHz	17.9dB @6.25GHz
Return Loss	4dB @12GHz	15dB @6.25GHz

< Return Loss >

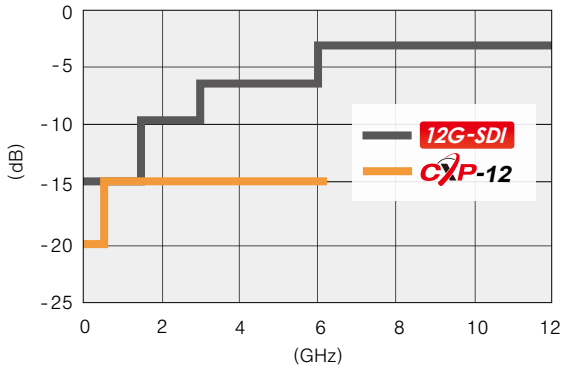

■ Canare CXP-6/12 Products (for fixed installations)

Coax Cable	UL Type	BNC	MicroBNC	DIN 1.0/2.3 (up to CXP-6)	Die Set
L-2.5CHD	CMR	BCP-B25HD BCP-LD25HD	HBCP-D25HDA	DCP-C25HD	BCP : TCD-35CA HBCP & DCP: TCD-D253F
L-3.3CUHD		BCP-D33UHD	HBCP-D33UHDA	N/A	BCP : TCD-35CA HBCP: TCD-D253F
L-4.5CHD		BCP-B53	HBCP-D53A	DCP-C53	BCP : TCD-35CA HBCP & DCP: TCD-D534F
L-5.5CUHD		BCP-D55UHD	HBCP-D55UHD	N/A	TCD-55UHD
L-8CUHD		BCP-D8UHD	N/A	N/A	TCD-8HD

■ Canare CXP-6/12 Cable Assemblies Maximum Lengths
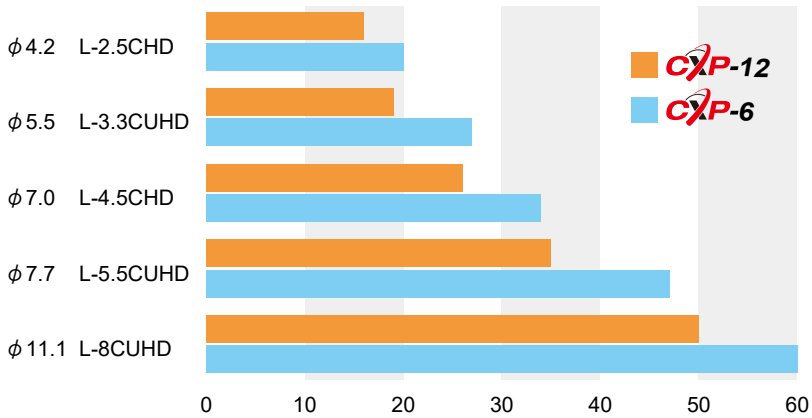
Coax Cable		CXP-6	CXP-12	Memo
L-2.5CHD		20m	16m	-
L-3.3CUHD		27m	19m	DIN not available
L-4.5CHD		34m	26m	-
L-5.5CUHD		47m	35m	DIN not available
L-8CUHD		60m	50m	BNC both ends only
End Connectors	BNC both	Yes	Yes	See page 87-88 for more information
	MicroBNC both	Yes	Yes	
	DIN both	Yes	-	
	BNC-MicroBNC	Yes	Yes	
	BNC/MicroBNC-DIN	Yes	-